Lum ESCO
www.Lum-ESCO.com

CATALOG NUMBER			
TYPE NUMBER		DATE	
PROJECT NAME /CUSTOM NAME			

LED HIGH BAY LIGHT
LumBAYPRO XL

The LumBAYPRO XL LED High Bay is a competitively priced, high-performance luminaire engineered to simplify specification, installation, and inventory management. Featuring field-switchable wattage and color temperature, LumBAYPRO XL adapts on site to meet changing project requirements—making it a smart, stocking-friendly choice for distributors, contractors, and national account programs.

With over 13 configurable options, including multiple mounting and control solutions, LumBAYPRO XL delivers exceptional flexibility for warehouses, distribution centers, manufacturing facilities, gymnasiums, and retail back-of-house spaces. Its versatile design enables a single luminaire platform to cover virtually all high bay lighting applications, making it an ideal solution for both new construction and retrofit projects.

Built for performance and value, LumBAYPRO XL combines proven LED technology, efficient thermal management, and durable construction to deliver consistent light output and long service life—while remaining budget-friendly for large-scale deployments.



FEATURES

CONSTRUCTION
- Cast aluminum body
- Quickly separate driver from LED module for easy maintenance.
- Adjustable wattage and color temp via easy access dip switch
- 80+CRI
- S Hook Mounting Standard
- Standard 6KV Surge Protection

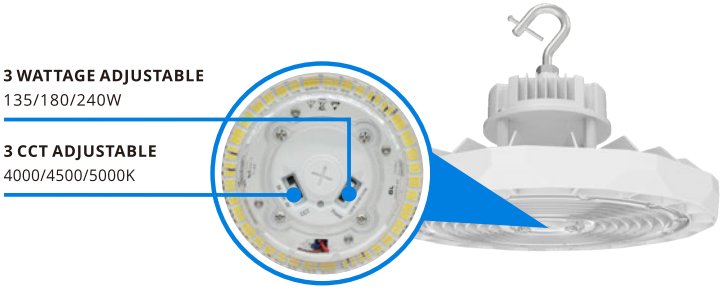



LISTING
- UL and cUL Listed
- Damp location rating
- DLC Listed Premium 5.1
- 5-Year Warranty

HOUSING
- Die cast aluminum housing
- Integrated heatsink cooling fins
- Unsurpassed thermal dissipation extending lifetime fixture performance



FINISH
- UV stabilized powder coated finish
- White finish standard

LENS
- High Impact Polycarbonate lens
- Type V optics standard

OPTIONS
- Alternative 347v driver
- Flat or Conical Drop Glass Lenses
- 0-10v Dimming Driver
- Acrylic and Aluminum Reflectors
- Wire Guards

SPECIFICATIONS

Lumen Package (LM):	21752 to 36490 lumens
Wattage Range (W):	135 to 240 watts
Efficacy Range (LPW):	Up to 179 LPW
Product Weight:	7.6LBS
Carton LBS:	2.3LBS

Specialized expertise and focus on ESCOs, national accounts and distributor partnerships
Call 866-458-6372 for assistance.

All rights reserved. Information and specifications subject to change without notice.

CATALOG NUMBER			
TYPE NUMBER		DATE	
PROJECT NAME /CUSTOM NAME			

ORDERING GUIDE

Wattage Adjustable

COLOR ADJUSTABLE 4000K-5000K

Series	Wattage	CCT	Distribution
LBXL LumBAYPRO XL	**240** 135/180/240 watts	**A** 4000/4500/5000K	**5** Type V

Voltage	Mounting	Color	Controls-Options
U Universal 120-277V **HV1** High voltage277-480V	**H** Hook Mount	**WH** White (Std) **BK** Black[1]	**OC** PIR Occupancy Sensor **EM** Field Installed IP65 Emergency Kit **OH** O Hook **PA** 3/4" Pendant Adapter **ARW** 16" Aluminum Refractor White **ARG** 16" Aluminum Refractor Gloss **ARC** 16" Acrylic Refractor Clear **ARM** 16" Acrylic Refractor White **FG** 16" Flat Glass and Band Clamp **WG** 16" Wire Guard **CG** 16" Conical Glass With Clamp **DL** 16" Drop Lens with Clamp

Footnote: 1 Contact Factory

OPTIONS



Option - OC
PIR Occupancy Sensor
OC - ANT-6-4T-GRL



Option - OH
O-Hook



Option - PA
3/4" Pendant Adapter
LBXLACC-PA



Option - EM
Field Installed
IP65 Emergency Kit
LBXLACC-EM

Specialized expertise and focus on ESCOs, national accounts and distributor partnerships
Call 866-458-6372 for assistance.

All rights reserved. Information and specifications subject to change without notice.

ACCESSORIES



FG 16" Flat Glass and Band Clamp Pendant Adapter



ARW 16" Aluminum Refractor White



ARG 16" Aluminum Refractor Gloss



ARC 16" Acrylic Refractor Clear



ARM 16" Acrylic Refractor Matte



FG 16" Flat Glass and Band Clamp

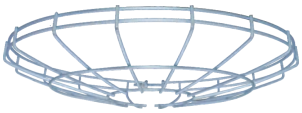

WG 16" Wire Guard



CG 16" Conical Drop Lens with Band Clamp



DL 16" Drop Lens with Band Clamp

DISTRIBUTION

ISO illuminance diagram(Lux) of 4000K at 240W

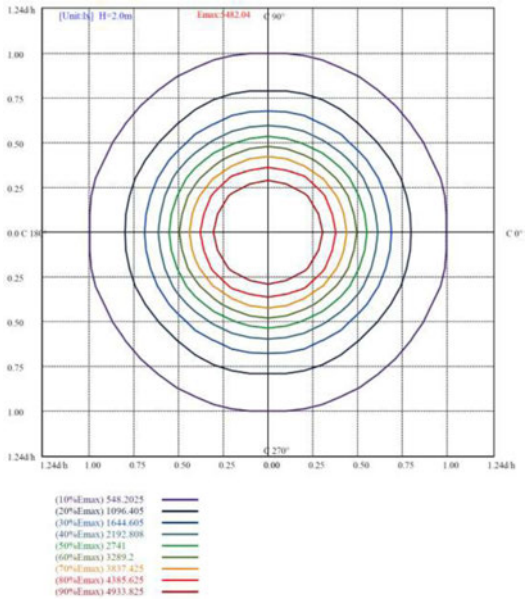

Polar Curves of 4000K at 240W

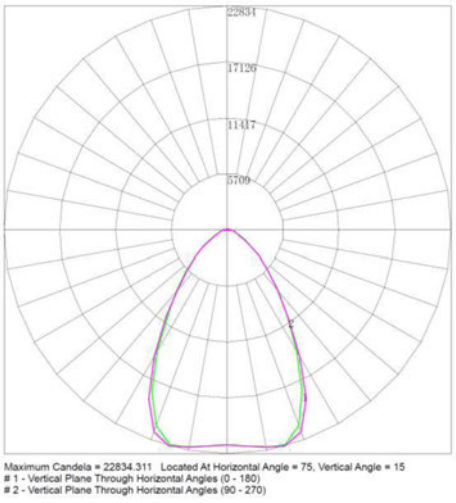

Specialized expertise and focus on ESCOs, national accounts and distributor partnerships
Call 866-458-6372 for assistance.

All rights reserved. Information and specifications subject to change without notice.

CATALOG NUMBER	
TYPE NUMBER	DATE
PROJECT NAME /CUSTOM NAME	

PERFORMANCE DATA

PERFORMANCE DATA			4000K					4500K					5000K				
Lumen Package	Distribution	CRI	Delivered Lumens	Efficacy (LPW)	BUG Rating			Delivered Lumens	Efficacy (LPW)	BUG Rating			Delivered Lumens	Efficacy (LPW)	BUG Rating		
					B	U	G			B	U	G			B	U	G
135 watts	5 Type V	80	21752	158	5	3	2	23679	179	5	3	2	22235	160	5	3	2
180 watts	5 Type V	80	27478	151	5	3	2	29912	172	5	3	2	28088	153	5	3	2
240 watts	5 Type V	80	33521	139	5	3	2	36490	157	5	3	2	34265	140	5	3	2

LUMEN MAINTENANCE TESTING DATA

LUMINAIRE AMBIENT TEMPERATURE FACTOR(LATF)		
Ambient Temp (℃)	(℉)	Lumen Multiplier
30℃	86℉	99%
40℃	104℉	98%
50℃	122℉	97%

Specialized expertise and focus on ESCOs, national accounts and distributor partnerships
Call 866-458-6372 for assistance.

All rights reserved. Information and specifications subject to change without notice.

ELECTRICAL DATA

Nominal Wattage	Input Voltage	Current Amps
135 watts	120	1.13
	208	0.65
	240	0.56
	277	0.49
	347	0.39
	480	0.28
180 watts	120	1.5
	208	0.87
	240	0.75
	277	0.65
	347	0.52
	480	0.38
240 watts	120	2
	208	1.15
	240	1
	277	0.87
	347	0.69
	480	0.5

SENSOR OPERATIONS

Functions and Options

It offers 2 levels of light control: 100% brightness and dimming levels (0%, 25%, 50%, 75%); selectable time delay and adjustable detection area.

1.Plug in and switch on the LED lamp. The lamp will operate at 100% brightness.

2.After the warm-up time, the lamp will illuminate at 0–75% brightness according to your preset dim level (0%, 25%, 50%, 75%).

3.If motion is detected, the lamp will stay on at 100% brightness.

4.After the preset time delay (3 min / 10 min / 30 min / 1 hour):

a. If no motion is detected, the lamp will dim down to 0–75% brightness according to your preset level.

b. If motion is detected, the lamp will remain on at 100% brightness.



The light switches on at 100% when there is movement detected

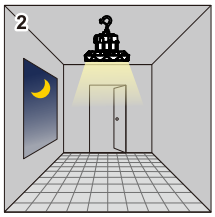

The light dims to DIM LEVEL (75%, 50%, 25%, 0%) after the TIME DELAY

OPERATION

1.SENSITIVITY: Adjusts detection range. Turn clockwise to increase, anti-clockwise to decrease. Detection range is 1m at "MIN" and 8m at "MAX".

2. TIME DELAY: Sets the hold time (duration the light remains at 100% brightness after last motion detection). Selectable duration: 3 min / 10 min / 30 min / 1 hour.

3. DIM LEVEL: Sets the standby dimming level to 0% / 25% / 50% / 75% of full output. Setting "DIM LEVEL" to 0% means the light turns fully off when vacant.

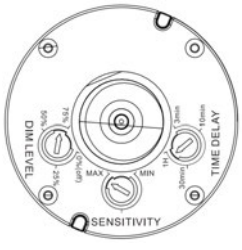

Specialized expertise and focus on ESCOs, national accounts and distributor partnerships
Call 866-458-6372 for assistance.

All rights reserved. Information and specifications subject to change without notice.

CATALOG NUMBER			
TYPE NUMBER		DATE	
PROJECT NAME /CUSTOM NAME			

DIMENSIONS

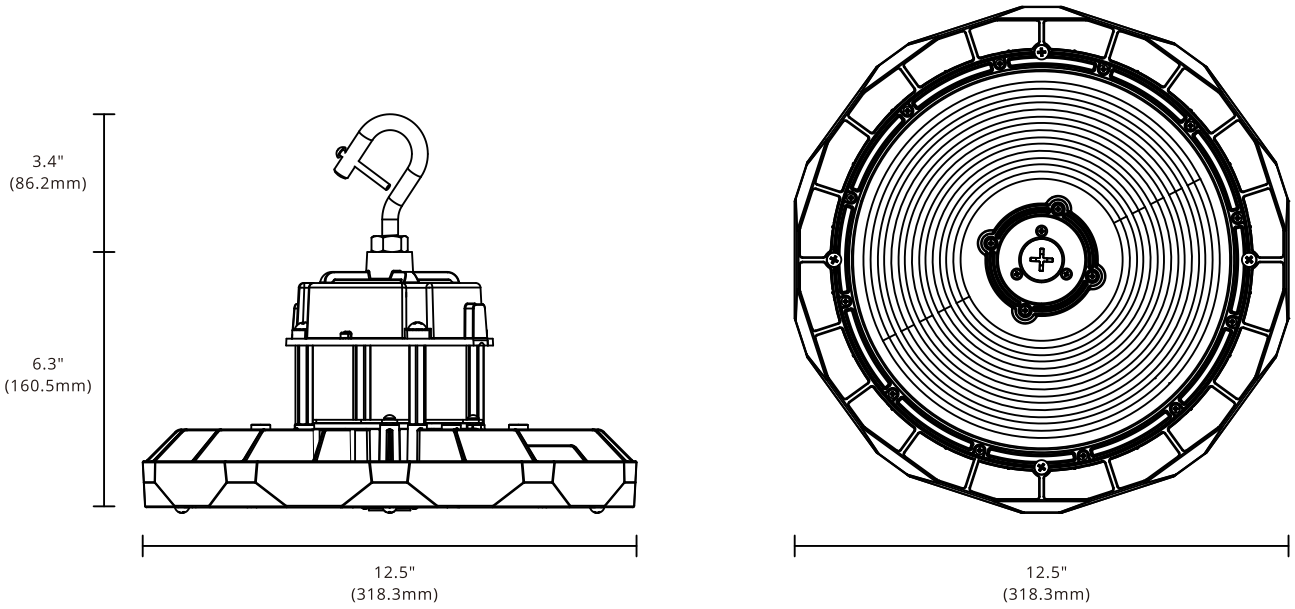

CARTON DIMENSIONS

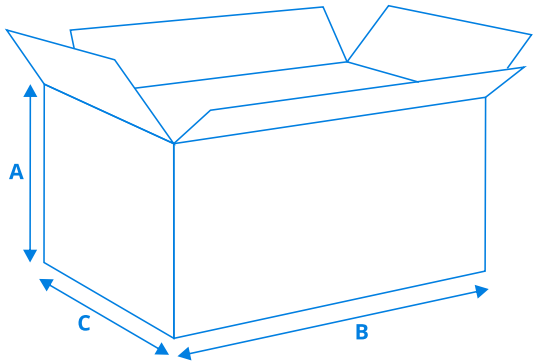

Weights	Master Carton				
Fixture Size	Carton Pack	Master Carton Weight LBS	Height A	Width B	Depth C
LBP1	1pc/ctn	9.9	7 1/4"	15"	15"

Specialized expertise and focus on ESCOs, national accounts and distributor partnerships
Call 866-458-6372 for assistance.

All rights reserved. Information and specifications subject to change without notice.