# Installation Guide

# LumPLEX

**SAVE THESE INSTRUCTIONS**

## BEFORE YOU BEGIN

Read and follow all safety instructions

## ⚠ WARNING

**RISK OF FIRE, EXPLOSION AND ELECTRIC SHOCK**

- This product should be installed, inspected, and maintained by a qualified electrician only, in accordance with the NEC (National Electric Code) and all local codes.
- Turn off electrical power before inspection, installation or removal.
- Use only UL (or other NTRL) approved wire for input/output connections. Wire AWG to be determined by qualified electrician during installation.
- Make sure LEDs and drivers are cool to touch when performing maintenance. Make sure the supply voltage is the same as the rated voltage of the luminaire.
- Do not install in a hazardous location environments
- Keep tightly closed when in operation

## ELECTRICAL/GROUNDING REQUIREMENTS

### Electrical Requirements

The LED driver must be supplied with 120 to 277V, 50/60 Hz (or 347 to 480V, 50/60 Hz, when applicable - refer to product label) and connected to an individual, properly grounded branch circuit protected by a 20 Ampere circuit breaker. Use min. 75°C supply.

### Grounding Instructions

The grounding and bonding of the overall system shall be done in accordance with NEC Article 600 and local codes

# LumPLEX

## LED Area Light

# Installation Guide

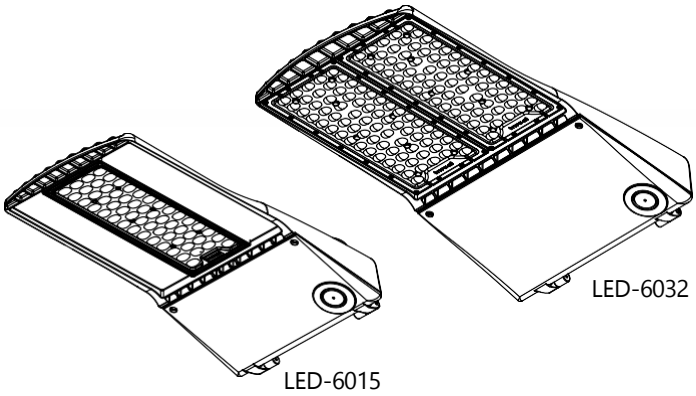


**Tools and Materials Required:**
#2 Phillips Screw Driver
Wire Strippers
Wire Cutters
Hex Bit Socket **Wrench** or Combo Wrench (1/2")

- Before starting ensure that the power is disconnected.
- Unpack fixture and ensure that there are no damaged parts.

<u>Pole Mounting:</u>

- Remove the pole mounting arm cover.
- Feed the included bolts through the lock washers and mounting arm holes.
- Align with the holes in the pole and thread through the plate on the inside of the pole.
- Tighten the bolts to 8-10 lbf-in.
- Open the LED driver compartment from the underside of the fixture.
- Install the included strain relief on the fixture. **Make sure it is installed correctly**
- Feed the included bolts through the flat washers inside the driver compartment, fixture bolt holes, pole mount gasket, and attach the fixture to the pole mount.
- Feed the power cable through the strain relief and pole mount arm.
- Connect the power leads with the included wire nuts according to the wiring diagram.
- Close the LED driver compartment door and secure it with the supplied screws
- Replace the pole mount arm gasket and attach the cover with the supplied screws
- The CCT and Power adjustment switches are located on the receptacle. Remove the rubber cover of the receptacle to access the switches. Adjust to the desired settings and replace the rubber cover

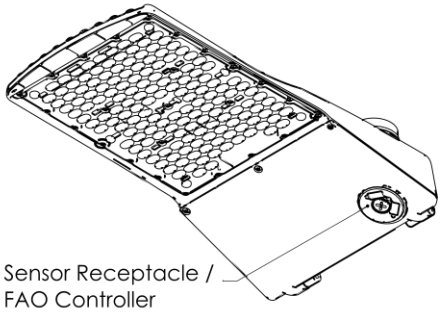


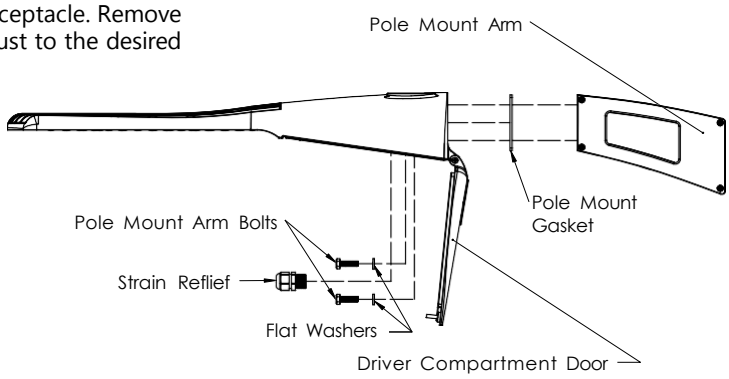


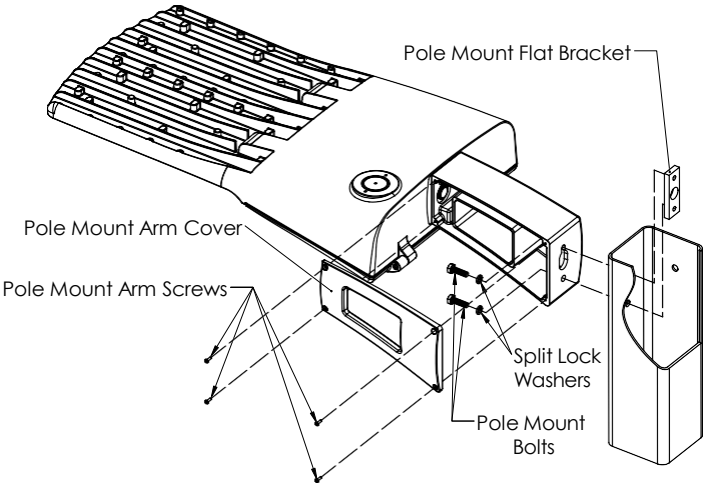

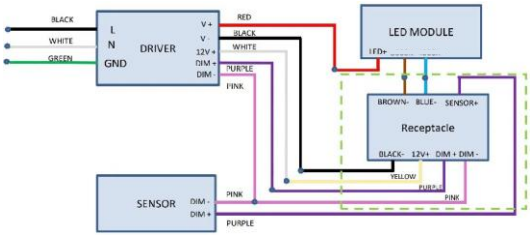
**Standard Wiring Diagram**